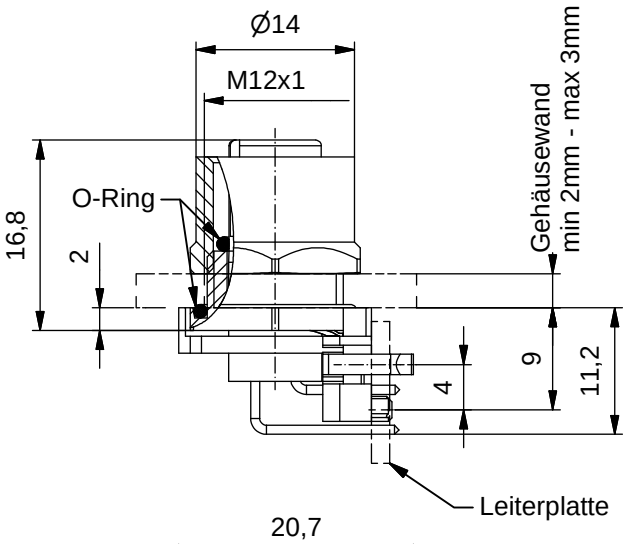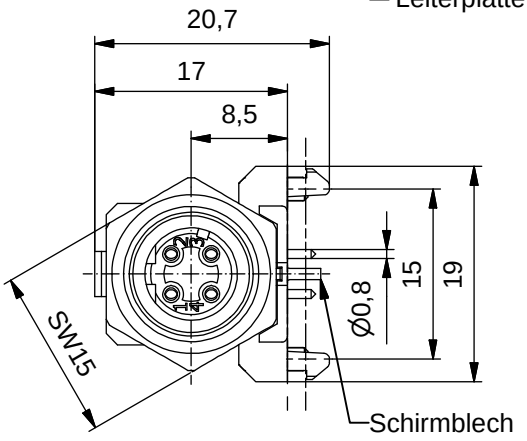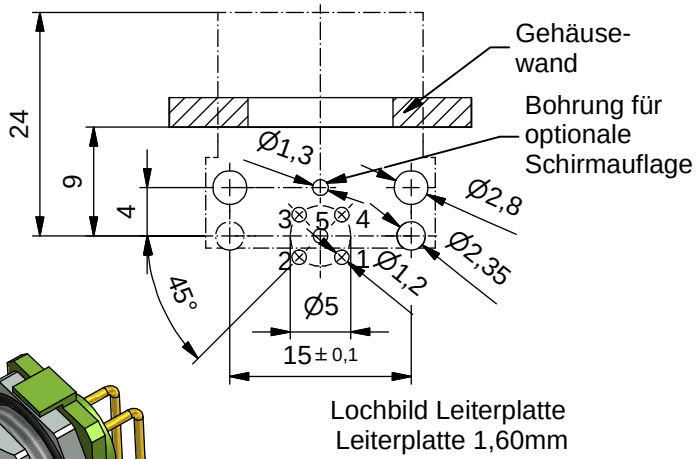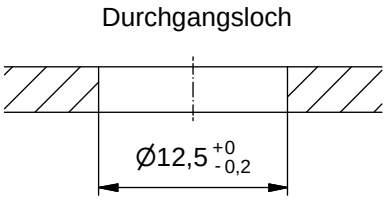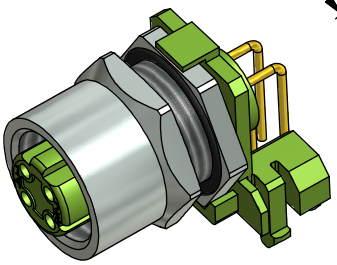2424410000 SAEIW-M12BD-4-HTL