2422960000 SAID-M12BD-4S-9SMT

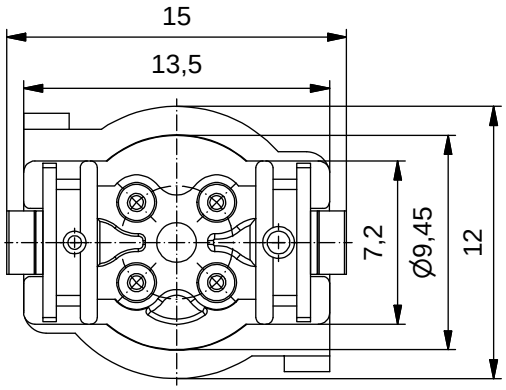

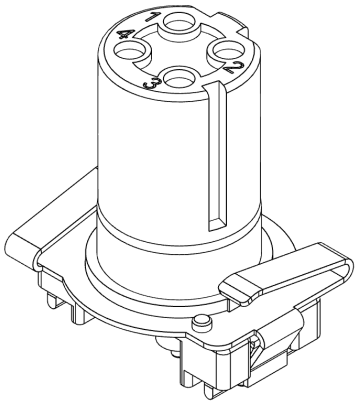

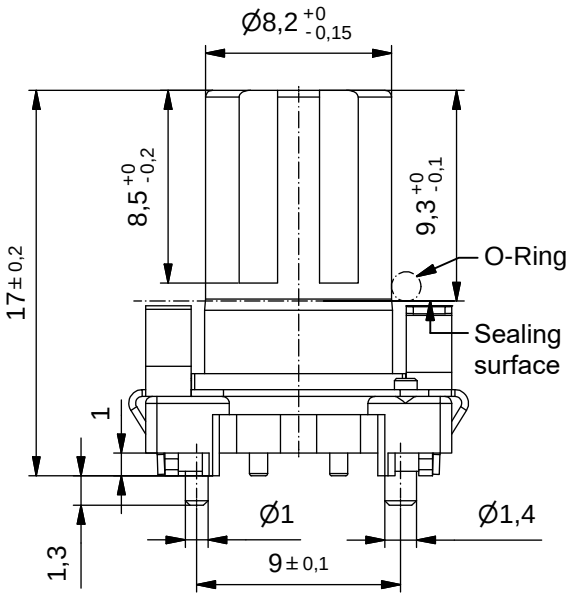

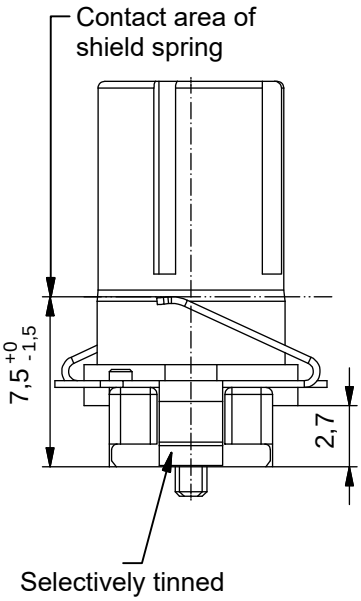

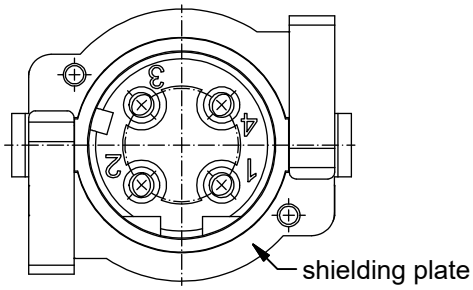
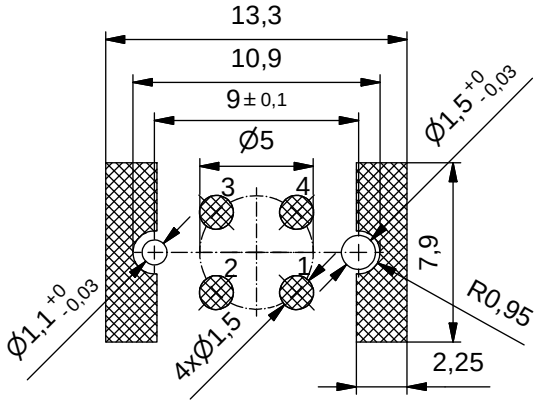
Recommended PCB Layout